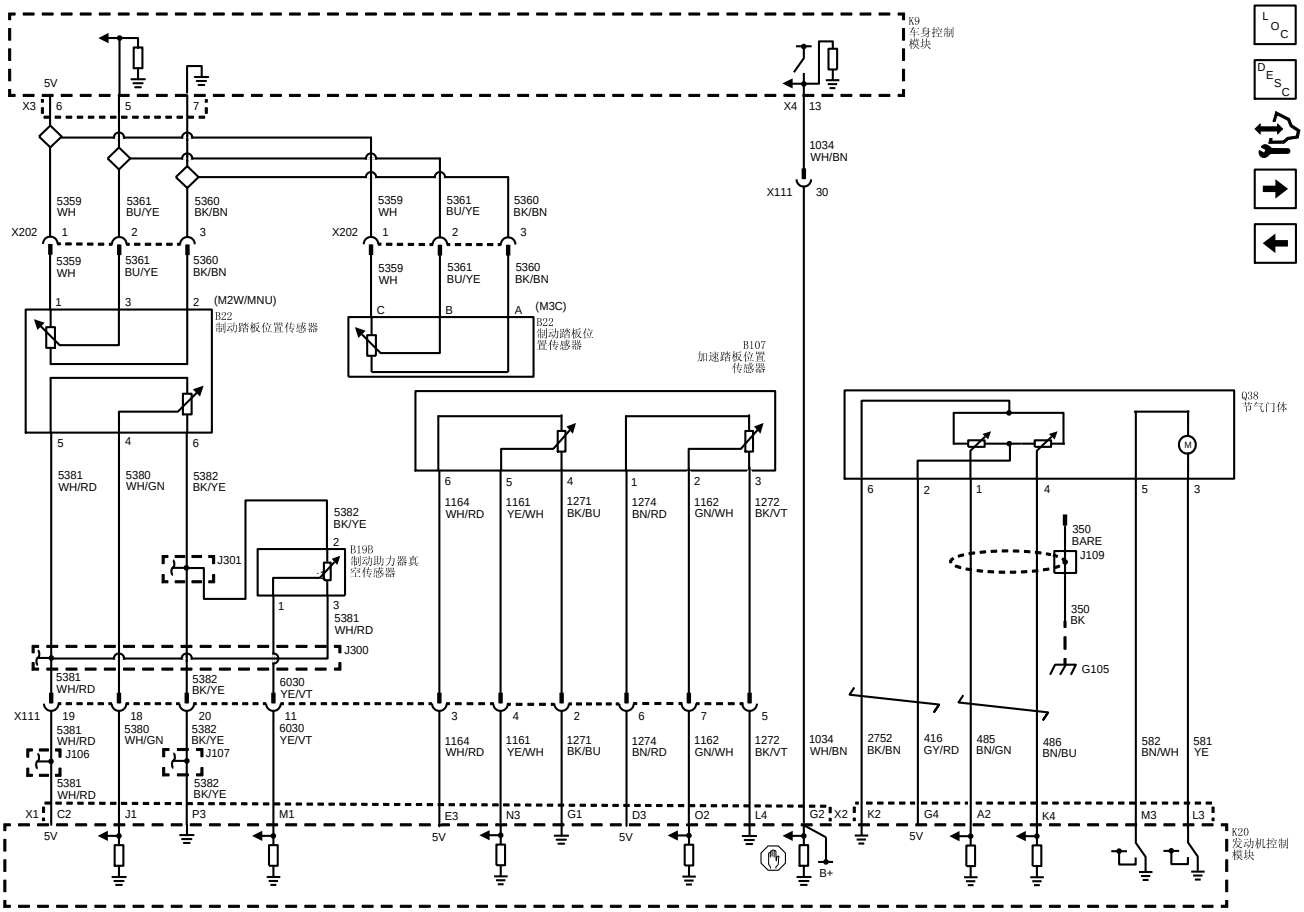

MetaWeb Demo Version